Important:
The excavation dimensions correspond to the minimum concrete foundation required for impact resistance. Adapt them to allow adjustments or other work by your personnel.

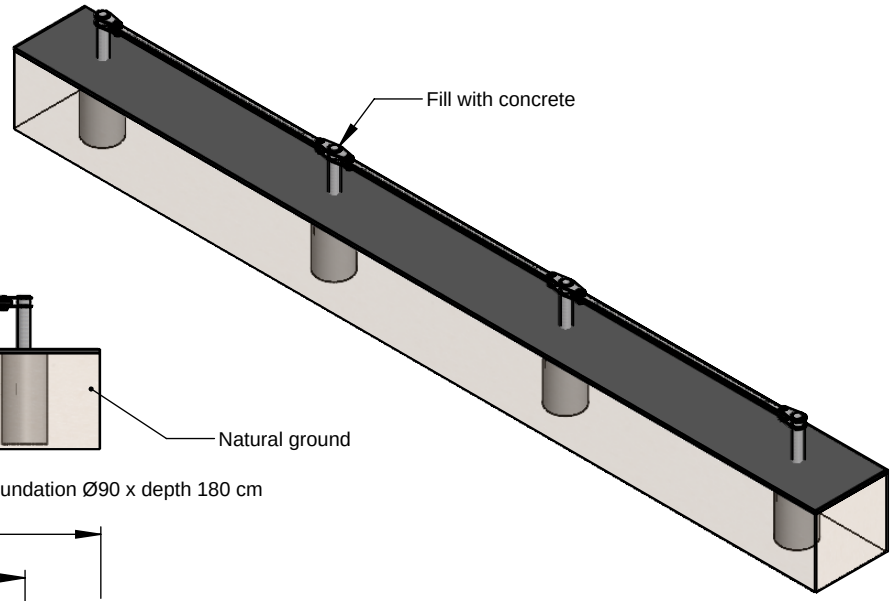

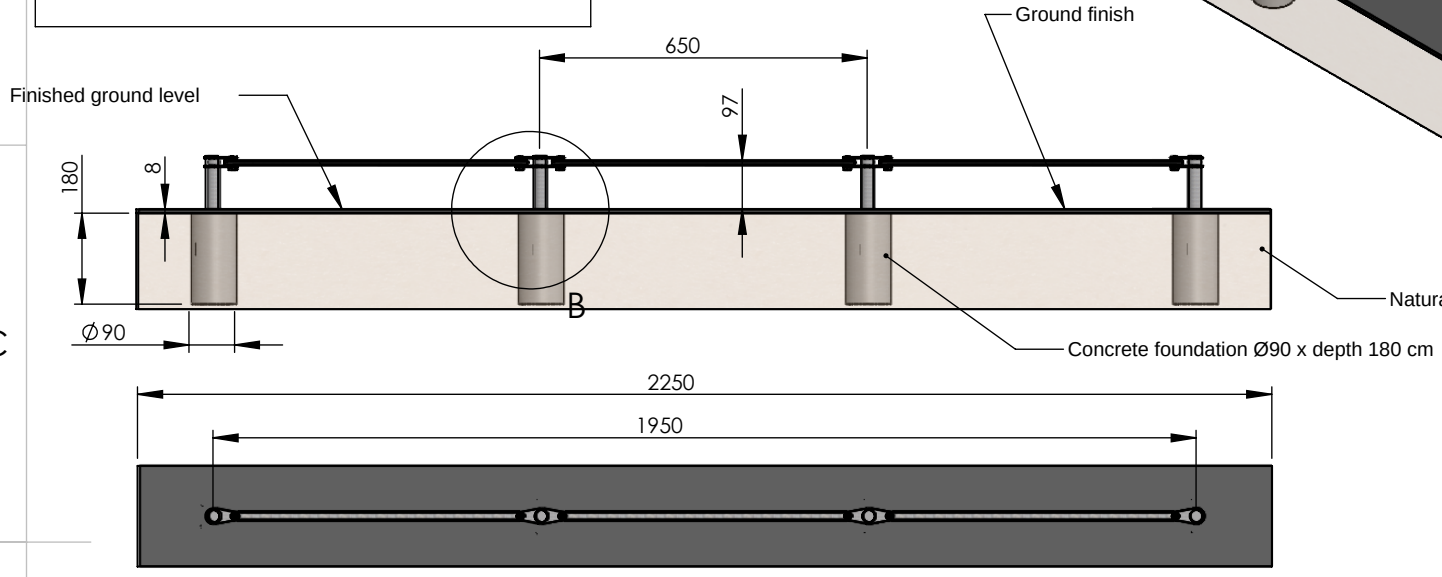

Direction of impact

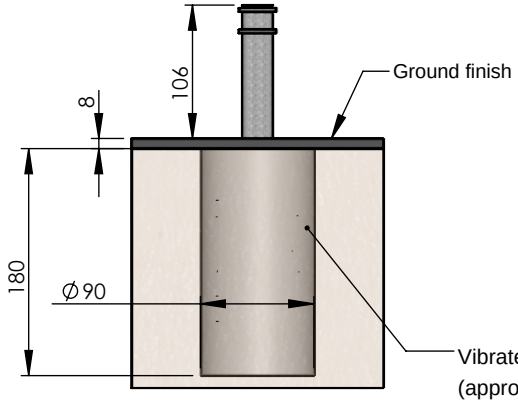

INSTALLATION METHOD:
- Excavate the foundations.
- Attach lifting slings to the posts.
- Fit the reinforcement cages to the posts.
- Position the posts with reinforcement cages in the excavations.
- Secure the posts in position.
- Sling the rails and fit them to the posts.
- Level the assemblies in both axes.
- Fill the entire excavation with vibrated concrete (see specifications), leaving 8 cm for the ground finish.
- Fill the posts with vibrated concrete (see specifications).
- Carefully position the post-top finishing disc in the fresh concrete.
- Complete the ground finishes.

Post weight: approx. 260 kg
Rail weight: approx. 270 kg

Concrete specifications:
- Minimum grade BPE NF C40/50 - 45MPa or similar.
- Minimum foundation dimensions for firm ground.
- Adapt dimensions to site-specific constraints.

INSTALLATION PROCEDURE

AMCO LES ESCAMOTABLES
LBA GROUP
20, Z.I. de l'Aspre
30150 Roquemaure
04 66 33 25 70

Safety railing

AR 7580

Page: 1/1

Dimensions in cm

SCALE 1:50

A4

Issued: 06/10/2026
Non-contractual document, subject to change without notice.

This drawing is the property of AMCO Les Escamotables. Reproduction, modification or distribution without our written consent is STRICTLY PROHIBITED.

- Drawing - 06/10/2026
261006 SB GC AR 7580

Important:
The excavation dimensions correspond to the minimum concrete foundation required for impact resistance. Adapt them to allow adjustments or other work by your personnel.

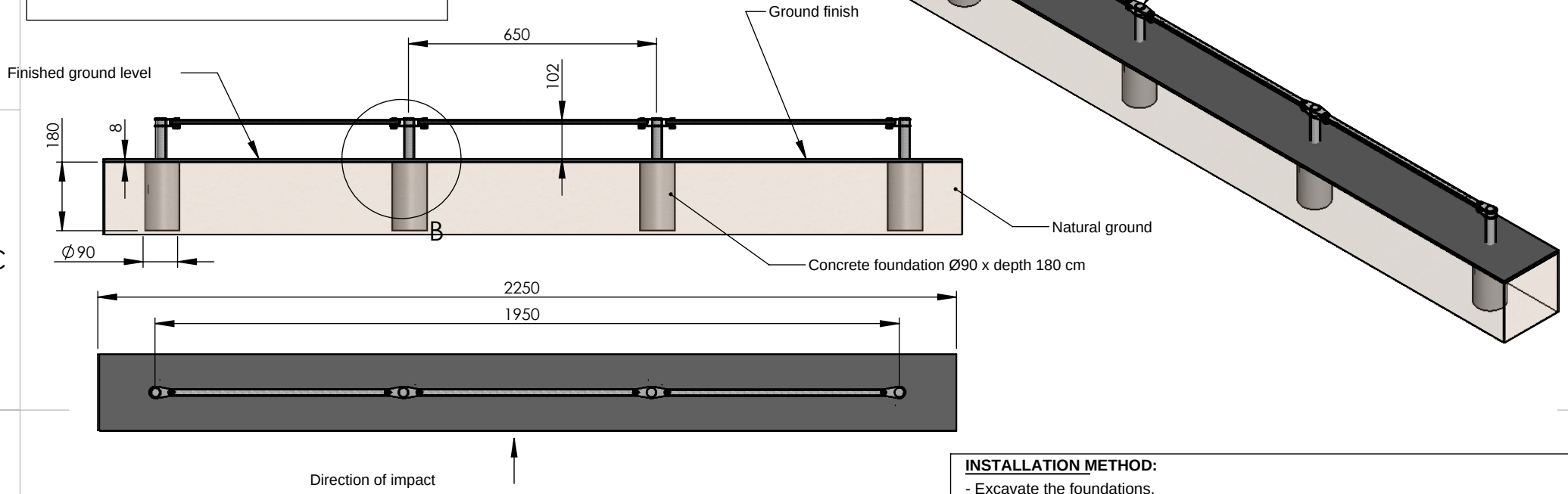

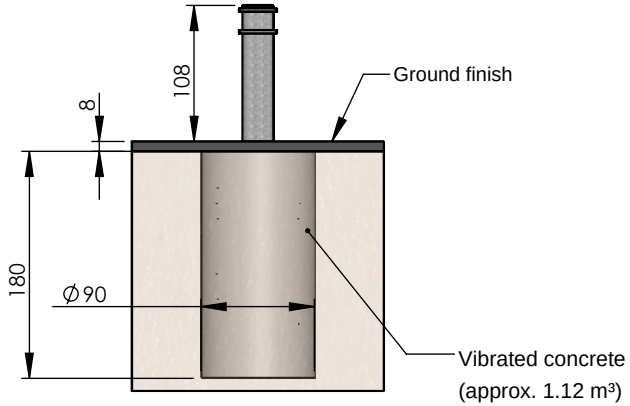

INSTALLATION METHOD:
- Excavate the foundations.
- Attach lifting slings to the posts.
- Fit the reinforcement cages to the posts.
- Position the posts with reinforcement cages in the excavations.
- Secure the posts in position.
- Sling the rails and fit them to the posts.
- Level the assemblies in both axes.
- Fill the entire excavation with vibrated concrete (see specifications), leaving 8 cm for the ground finish.
- Fill the posts with vibrated concrete (see specifications).
- Carefully position the post-top finishing disc in the fresh concrete.
- Complete the ground finishes.

Post weight: approx. 260 kg
Rail weight: approx. 270 kg

Concrete specifications:
- Minimum grade BPE NF C40/50 - 45MPa or similar.
- Minimum foundation dimensions for firm ground.
- Adapt dimensions to site-specific constraints.

INSTALLATION PROCEDURE

AMCO LES ESCAMOTABLES
LEA GROUP
20, Z.I. de l'Aspre
30150 Roquemaure
04 66 33 25 70

Safety railing

AR 7580
N2B

Page: 1/1

Dimensions in cm

SCALE 1:50

A4

Issued: 06/10/2026
Non-contractual document, subject to change without notice.

This drawing is the property of AMCO Les Escamotables. Reproduction, modification or distribution without our written consent is STRICTLY PROHIBITED.

- Drawing - 06/10/2026

261006 GC AR 7580 N2B